[illegible]

[illegible]) [illegible] .[illegible] .[illegible]

[illegible] .[illegible] .[illegible] .[illegible] .[illegible].

:[illegible]

0.05 > :[illegible] (1)mm

(2) 99.8 = / <:[illegible]

(3) 10 :[illegible]GW / CM2

[illegible] Carmanhaas:

(1) [illegible].

(2) [illegible]

[illegible]

Telecentric F-theta Scan Lenses

1030-1090nm Fiber Laser

532nm Green Laser

355nm UV Laser

□□□□□ □□□□□ □□□□□□□□ □□□□:□□□□ □□□

□□□□□□ □□□□□□□□:

1030-1090nm Telecentric F-Theta Scan Lenses

Part Description	FL(mm)	Scan Field (mm)	Max Entrance Pupil (mm)	Working Distance (mm)	Mounting Thread	Wavelength
TSL-(1030-1090)-50-100Q-(14CA)	100	50x50	14	140.5	M85x1	1030-1090nm
TSL-(1030-1090)-52-160-(14CA)	160	52x52	14	186	M79X1	
TSL-(1030-1090)-60-120-(15CA)	120	60x60	15	162	M85x1	
TSL-(1030-1090)-75-160-(14CA)	160	75x75	14	186	M85x1	

Optical System Layout

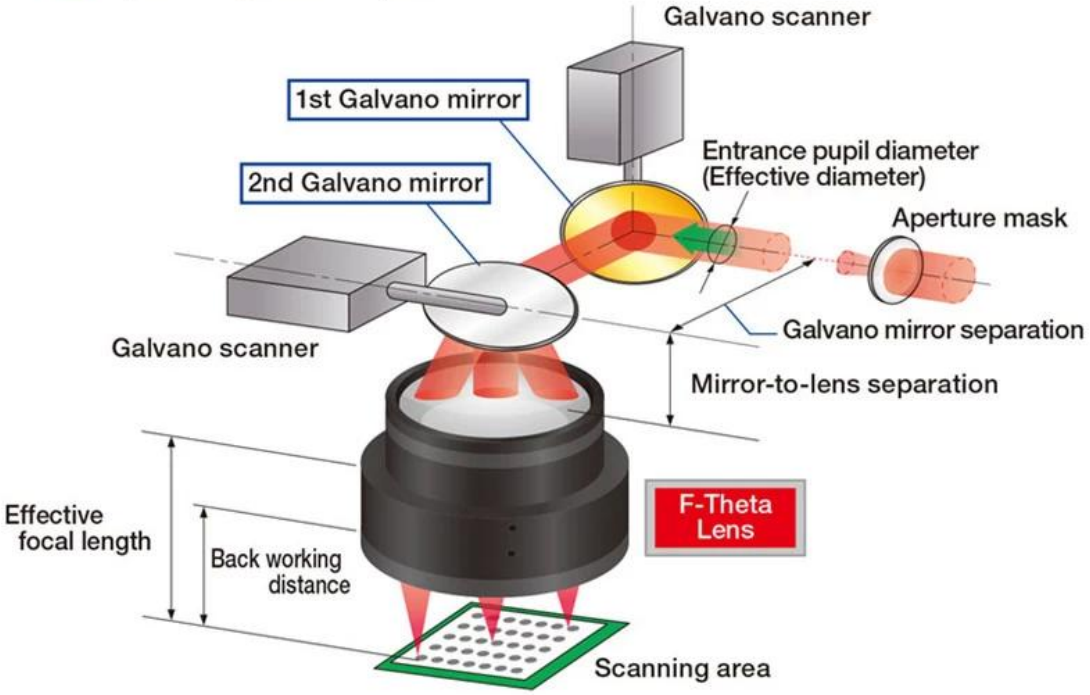

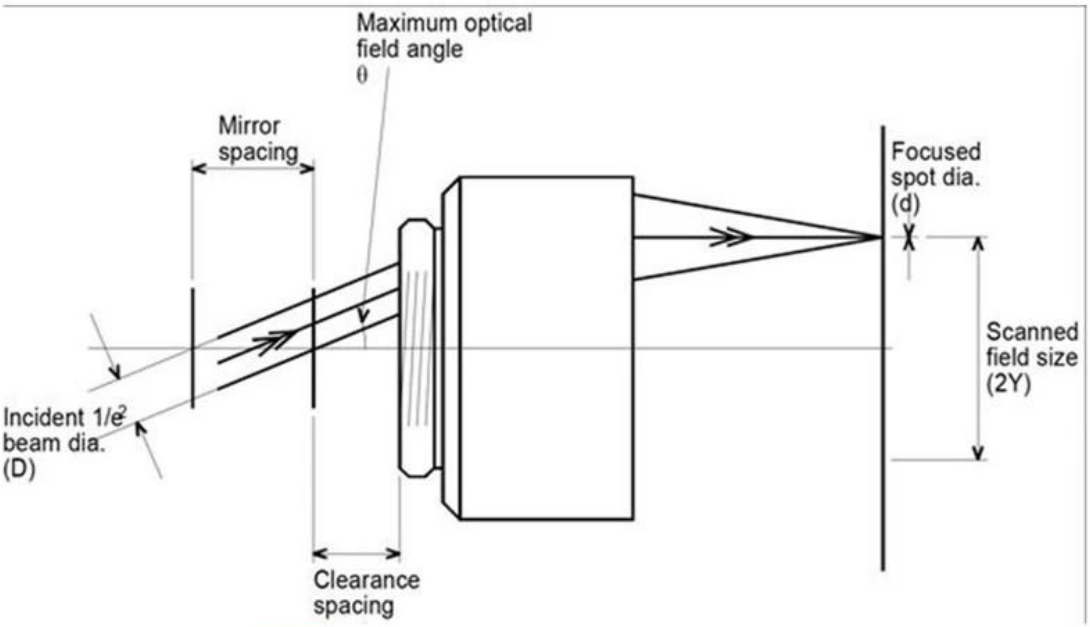

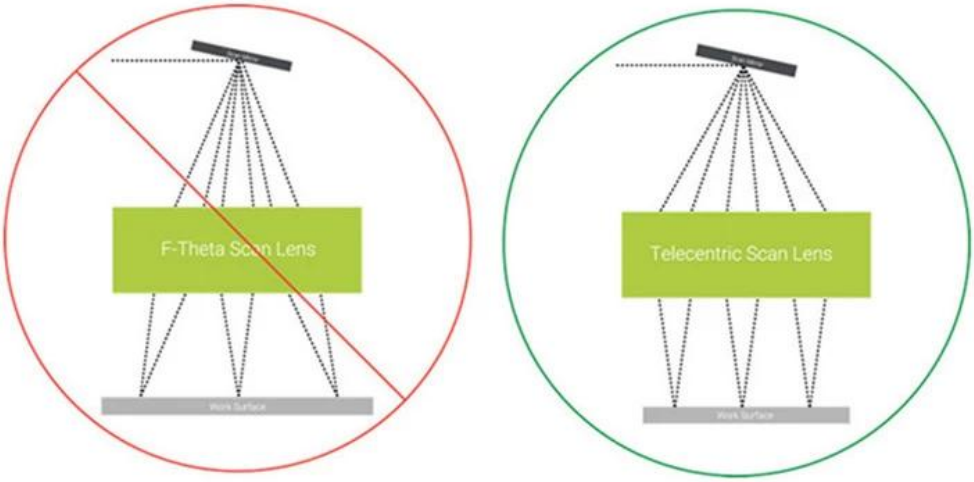

Figure 2: Non-telecentric vs. telecentric f-theta lenses.

□□□□


卡门哈斯(苏州)
CARMAN HAAS


CARMAN HAAS
企业愿景：致


verifire
zygo

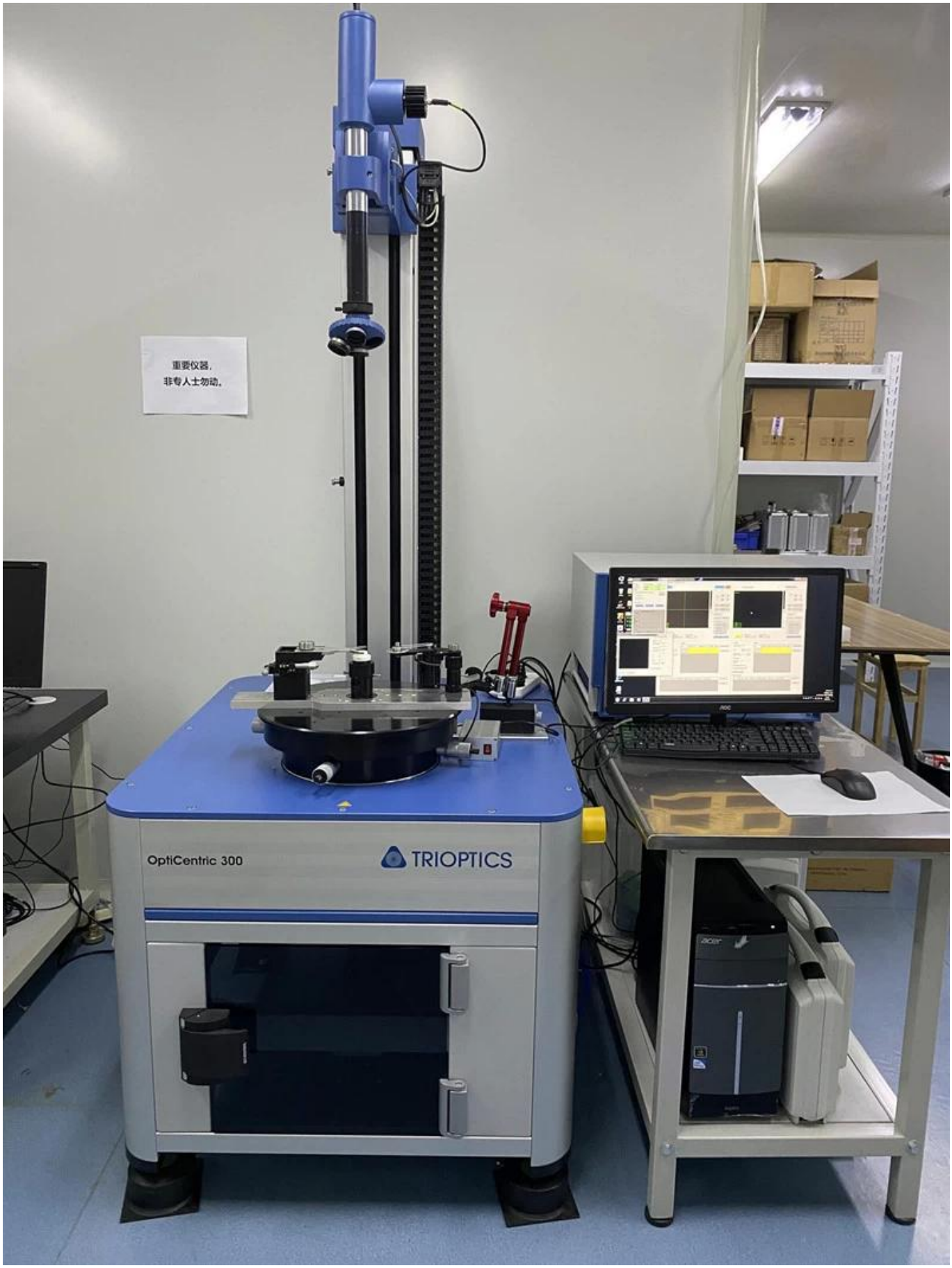
重要仪器，
非专人士勿动。
OptiCentric 300
TRIOPTICS

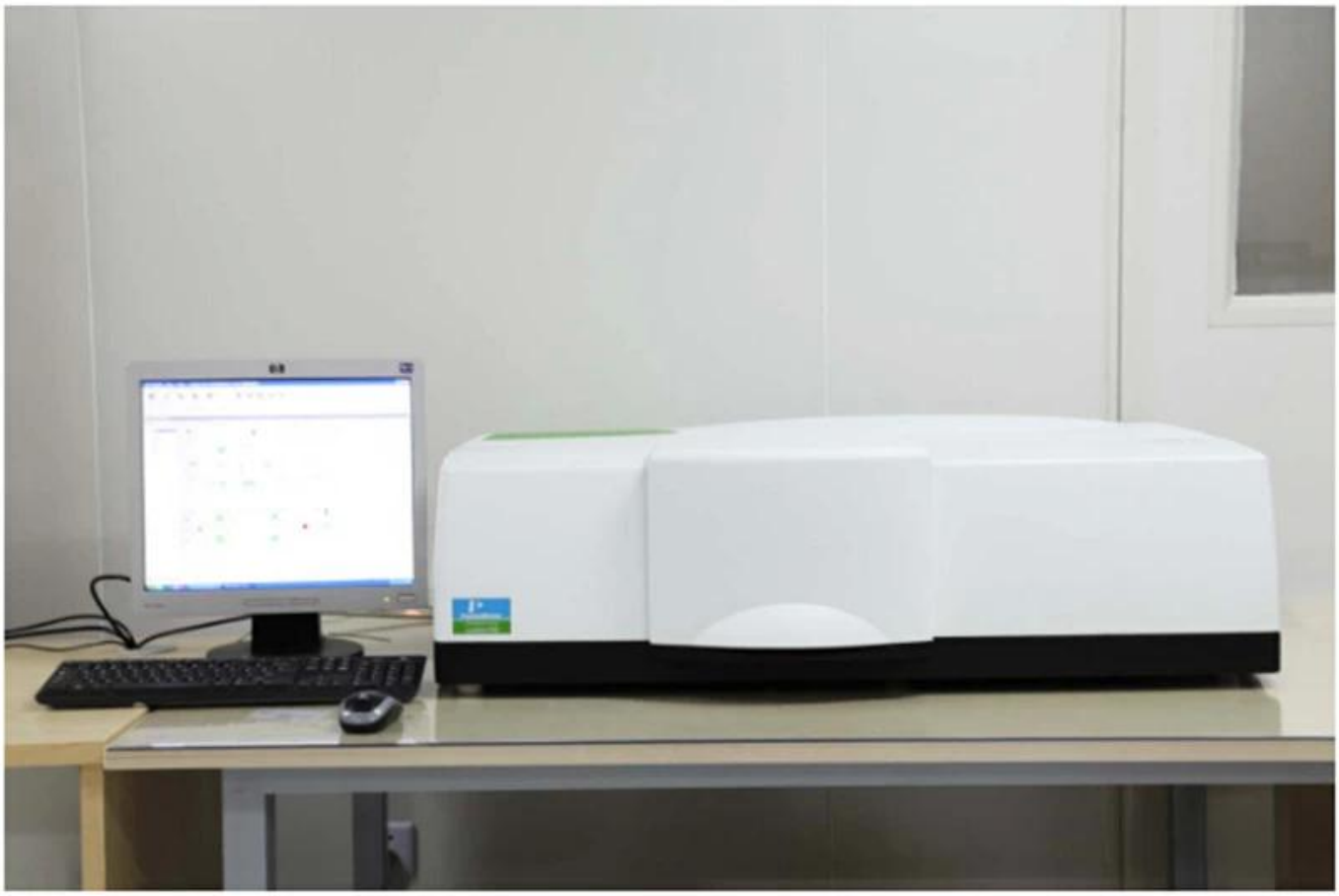

PerkinElmer Lambda 950---Testing Transmission and Reflectivity

□□□□□ □□□□□


慕尼黑上海光博会
LASER PHOTONICS CHINA
LASER PHOTONICS
Messe München
LASER PHOTONICS INDIA
卡门哈斯


SERIGRAFIA
SIGN
FUTURETEXTIL
Brazil
CARMAN HAAS LASER
1-121
CARMAN HAAS Laser
Technology (Suzhou) Co., Ltd.
4I16
Laser Korea 2019


MAKTEK
eurasia
Turkey
SIGNiSTANBUL
PEKLAMA
Russia
RAYLOGIC
YAROV
INTERNATIONAL PAVILION
CARMAN HAAS LASER
L-46
CARMAN HAAS LASER TECHNOLOGY CO., LTD.

CERTIFICATE

ATIESTATION
CERTIFICATE OF MACHINERY AND LOW VOLTAGE DIRECTIVES

Technical file of the company mentioned below has been observed and audit has been completed successfully. 2006/42/EC Machinery Directive and 2014/ 35/EU Low Voltage Directive have been taken as references for these processes

Company Name	: **Carman HAAS Laser Technology (Suzhou) Co., Ltd.**
Company Address	: No 155, West Road Suhong, Suzhou Industrial Park, Suzhou City, Jiangsu , P.R.China
Related Directives and Annex	: **Low Voltage Directive 2014/35/EU** **Machinery Directive 2006/42/EC**
Related Standards	: **EN ISO 12100:2010; EN 60204-1:2006+A1:2009+AC:2010**
Product Name	: **Laser Marking Machine**
Report No and Date	: SD-90049717;09.08.2018
Product Brand/Model/Type	: LMCH-3W,LMCH-5W,LMCH-10W,LMCH-15W,LMCH-20W,LMCH-25W, LMCH-30W,LMCH-50W,LMCH-60W,LMCH-70W,LMCH-100W, LMCH-120W,LMCH-150W,LMCH-200W,LMCH-300W,LMCH-500W

Certificate Number	: **M.2018.201.N6073**
Initial Assessment Date	: 10.08.2018
Registration Date	: 13.08.2018
Reissue Date/No	:
Expiry Date	: **12.08.2023**

UDEM International Certification Auditing Training Centre Industry and Trade Inc. Co.

The validity of the certificate can be checked through www.udem.com.tr. The CE mark shown on the right can only be used under the responsibility of the manufacturer with the completion of EC Declaration of Conformity for all the relevant Directives. This certificate remains the property of UDEM International Certification Auditing Training Centre Industry and Trade Inc. Co. to whom it must be returned upon request. The above named firm must keep a copy of this certificate for 15 years from the registration of certificate. This certificate only covers the product(s) stated above and UDEM must be notified in case of any changes on the product(s)

Address: Mutlukent Mahallesi 2073 Sokak (Eski 93 Sokak) No:10 Çankaya – Ankara – TURKEY
Phone: +90 0312 443 03 90 **Fax:** +90 0312 443 03 76
E-mail: info@udemltd.com.tr www.udem.com.tr

ISO 9001

Certificate of Approval

Certificate No.: 10119Q12565R0M

Awarded to

Carman Haas Laser Technology(SuZhou) Co., Ltd.

Organization Code Certificate No. / Unified Social Credit Code:91320594MA1MF4EP56
Add.:No.155, West Road Suhong, Suzhou Industrial Park, Suzhou City, Jiangsu Province, P.R. China. 215000

Beijing ZhongLianTianRun Certification Center (ZLTR) certify that the Quality Management System of the above organization has been assessed and found to be in accordance with the requirements of the standard:

GB/T19001-2016 / ISO9001:2015

SCOPE OF CERTIFICATION/REGISTRATION

The Research and Development and Production of Optics Lenses (Except the limits of national laws and regulations.)

This certificate is made valid when used with certification scopes and the requirements of applicable laws and regulations. These requirements include, but are not limited to, administrative permits, scopes of qualifications, and CCC requirements.
Subject to operation conditions in requirements conformity with Quality Management System,
This Certificate is valid for a period of three years only,
Date from: Mar 13th,2019 To: Mar 12th,2022
The effectiveness of this Certificate shall be Validated by periodic surveillance audit of ZLTR for maintenance.
Information of this certificate can be found on the official website of Beijing Zhonglian Tianrun Certification center (http://www.zltr.com.cn)

SCC Accredited CB-MS OCSM Accredited CCN

ISSUED BY

Beijing Zhongliantianrun Certification Center
Room2603, 22nd Floor, 2nd Unit, Block 1, No.4 Yard, Qiyang Road, Chaoyang District, Beijing, P.R. China 100102

Information of this certificate can be found on the official website of Certification and Accreditation Administration of the People's Republic of China (http://www.cnca.gov.cn)

ISO 9001

Packaging & Shipping


Inquiry
Contract
Testing and packing
Receiving
Reply
Receive payment & Product
Delivery


ups
DHL
WORLDWIDE EXPRESS
TNT
EMS
FedEx

□□□□□□□□□ □□□□□:

:□□□□□□□□□ □□□□□□□□ □□□□ □□ □□□
.□□□□□□□□□□□ □□□□□□ □□□ □□ □□□ □□□□ (1 □□□□□□
.□□□□□□□□ □□□□ □□□□□□□□ □□□ □□□□□□□□□ □□ □□□□ □□□ □□□□ □□□□□ (2 □□□□□□
.□□□□□ □□□□□□ □□□□□□ □□□ (3 □□□□□□
□□□□□□□□ □□ □□□□ □□□□□□ □□□□□□□□□□ □□□□□□ □□□□□ (4 □□□□□□.

□□□□□□□□□□ □□□□□□□□:

(1) □□ □□□□□□□□ □□□□ □□ □□□□ □□□□□□□□□ □□□□□□□□□ □□□ □□□□□□ DHL□ UPS□ □□□□□□□□ TNT□ EMS □□□
□□□□ □□ □□□□□□□□ □□□□ □□ □□□□ □□□□□□□□ □□□ □□□ □□□□□□ (2) Exwork □□ FOB □□ CNF □□ CIF □□□□ □□□□ □□
□□□ □□ □□□□□□□□ □□□□□□□□ □□□□ □□□ □□□□ □□□□□ □□□□ □□ □□.

□□□□□□□□□□

Q1. □□□□□□□□□ □□□□□□ □□□ □□

A1: □□□□□□ □□□□□□□ □□□□□ □□□□□□□ □□ □□□□□□ □□□□□□□ □□□□ □□□□□□□ □□□ □□□□ □□□.

Q2.How □□□□□□□□□□ □□□□ □□□

A2: □□□□□□□□ □□□□□□□□ □□ □□□□□□□□ □□□□□□ □□□ □□□□□ □□□□□□□□ □□ □□□□□□ □□□□□□ □□□□ □□□□□□□ □□□□□□
□□□□□□□□ □□□□ □□□□ □□□□□ □□□□□□□ □□□□□□□□.

Q3.How □□□□□□ □□□

A3: □□□□□□□ □□□□□□□ □□□□ □□□□□□□□ □□□□□ □□□□□□ □□□□□ □□□□ □□□.

Q4.How □□□□ □□□□□□

A4: □□□□ □□□□□ □□□□ □□□□ □□□□□□□ □□□□□ □□□□□□□□ □□□□ □□□□□ □□ □□□□□□□□□ □□□ □□□□□□ □□ □□□□□□□
□□ □□□□ .□□□□□ □□□ □□□ □□□ □□□□□□□□ □□□□□□□□□□ □□□□□□ □□□□.

Q5.May □□□□□□□□□□ □□□□ □□□□□□□ □□□□□□ □□□□

A5: □□□□□ □□□□□□□ □□□□□□□□ □□□□□□ □□□□□□□ □□□□□□ □□□□□□ □□□ □□□□□ □□□□ !□□□.

q6.can □□□ □□□□□ □□□□□□ □□□□

A6: □□□□□ □□□ □□ □□□□□ □□□□□□ □□□□□ □□ □□□ □□□□□ □□□□.

Q7.How □□□□□ □□□ □□□□□□ □□ OEM □□ ODM□

A7: □□□□□□ □□□□□□ □□□□□ □□□□□□ □□□□□ OEM / ODM ORDers. □□□□□□□□ □□□ □□□□□□ □□ □□□ □□□□□□□ □□□□

□□□□□□ □□□□□ □□□□□□□□ □□□□ □□□□□ □□.

q8. □□□□□□□ □□□ □□□□ □□ □□□ □□□

A8: □□□□ □□ □□□□□ □□□□□ T / T □□□ □□□ □□□□□□□ □□□□ □□□□□□ □□□□□ □□□□□ □□□□□.