□□ □□

□□ □□ :

Carmanhaas□ □□ 2D □□□ □□□ □□□, 3D □□□ □□□ □□□, □□□ □□□ □□ □□□, □□ □□□ □ □□□ □□□ □□□□ □□□□ □□□□. (**UV F-θ □□ □□□□ □□**)
□□ (A □□□) □ □□ □□□□ □□□ Carmanhaas 2 □ □□□ □□□ □□□ □□□ □□ □□, □□□ □□, □□□ □□, □□□ □□□ □□□, 3D □□□, □□□ □□, □□□ □□, □□□ □□□ □□□ □□ □□ □□□ □□□□□□□. □□□□ □□.

□□:

1. □□□ : 7mm, 10mm, 12mm, 14mm, 16mm, 20mm, 30mm;
2. □□ □□□ □□, □□□□ □□ □□□□, □□□ □□ □□;
3. □□ □□□□ □□□□□ □□ □□□□ □□ □□ □□ □□;
4. □□□ □□□ □□□ □□ □□□ □□ □□□ & □□ □□□ □□;
5. □□ □□□□□□□□□ □□□□ □□ □□□□ □□□ □□.

□ □□□□ :**355 Galvo □□□ □□ □□**

PRODUCT DETAILS

HIGH SPEED GALVO LENS

NO.1

SMALL SIZE, FRIENDLY INTERFACE
IN ORDER TO IMPROVE THE QUALITY OF EXPORT,
USE NEW TECHNOLOGY, NEW CRAFT, IN THE GALVO
LENS SCANNING SYSTEM, GRAPHIC IS GOOD, NO DISTORION ETC...

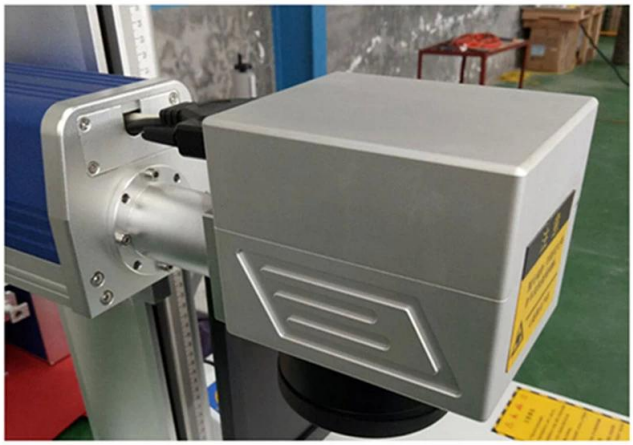

FILED LENS

FILED LENS SCANNING SYSTEM TO ADOPT NEW TECHNOLOGY
IMPORTED SCANNING SYSTEM MAKES THE SCANNING SPEED IS
UP TO 7000 MM/S

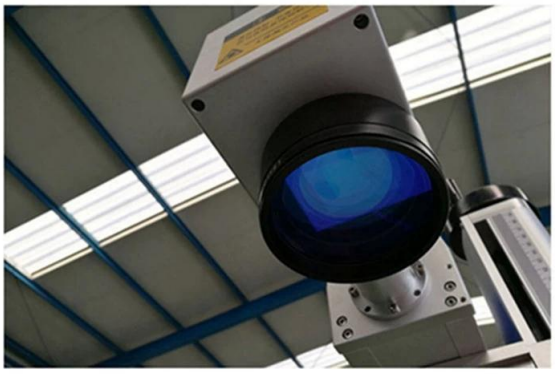

CARMAN HAAS

CARMAN HAAS

F-theta Lens

Own unique designs with different focal length

Getting a smaller spot size what you demand

Detail Image

□□ □□ □□ :

□□	ZB2D-10A	ZB2D-10C
□□□ (mm)	10	10
□□□□ □□ □□	± 0.35rad	± 0.35rad
□□□ □	<0.5 mrad	<2 mrad
□□ □□	0.15ms	<0.2ms
□□ □□ □□	<0.3ms	<0.4ms
□□□	<15 urad	<20 urad
□□ □□□□	<50 ppm/K	<50 ppm/K
□□ □□□□	<30 urad/K	<30 urad/K
8 □□□ □□ □□ □□□□ (30 □ □□ □)	<0.1 mrad	<0.1 mrad
□□ □□	4000mm / □	8000mm / □
□□□□ □□	15m / s	10m / s
□□ □□ □□	± 15VDC □□ 5A	± 15VDC□□ 3A
□□□ □□	XY2-100	XY2-100 □□ SPI
□□□□ □□	± 5V	± 5V □□ ± 10V
□□ □□	355nm	

□□ □□	25 ℃ ± 10 ℃	25 ℃ ± 10 ℃

UV □□□ F-Theta □□ □□ (355nm)

Part Description	FL(mm)	Scan Field (mm)	Max Entrance Pupil (mm)	Working Distance (mm)	Mounting Thread
SL-355-70-100	100	70x70	10	134	M85x1
SL-355-110-170	170	110x110	10	217.6	M85x1
SL-355-150-210	210	150x150	10	249	M85x1
SL-355-175-254	254	175x175	10	306.7	M85x1
SL-355-220-330	330	220x220	10	384.2	M85x1
SL-355-300-420	420	300x300	10	482.3	M85x1
SL-355-360-580	580	360x360	16	660	M85x1
SL-355-520-750	750	520x520	10	824.4	M85x1
SL-355-610-840-(15CA)	840	610x610	15	910	M85x1
SL-355-800-1090-(18CA)	1090	800x800	18	1193	M85x1

□□□ □□ (mm) :

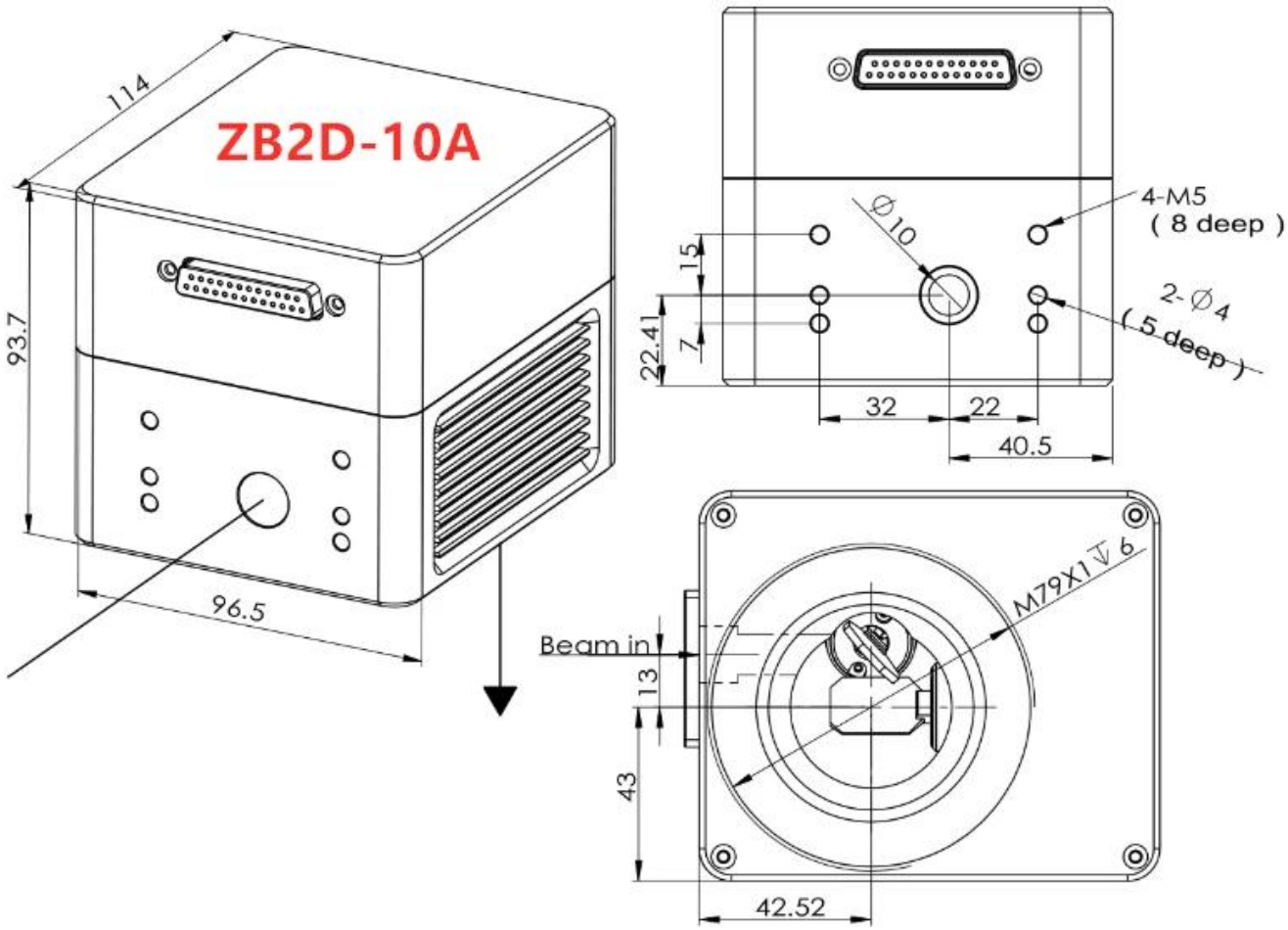

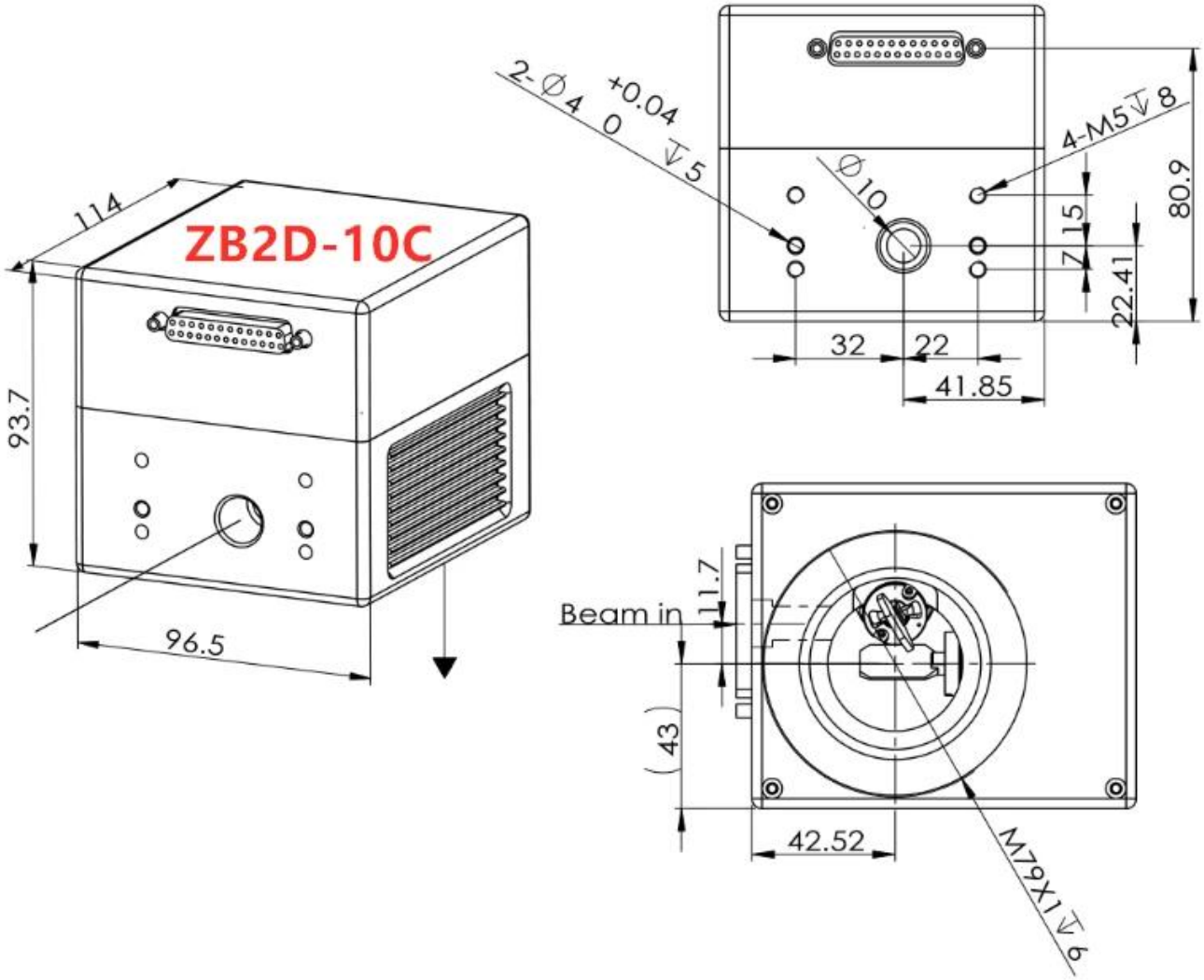
ZB2D-10C
114
93.7
96.5
2-Ø4 +0.04 0 ↧5
Ø10
4-M5↧8
80.9
15
7
22.41
32
22
41.85
Beam in
11.7
(43)
42.52
M79X1↧9

□□ □□□□□ □□ :

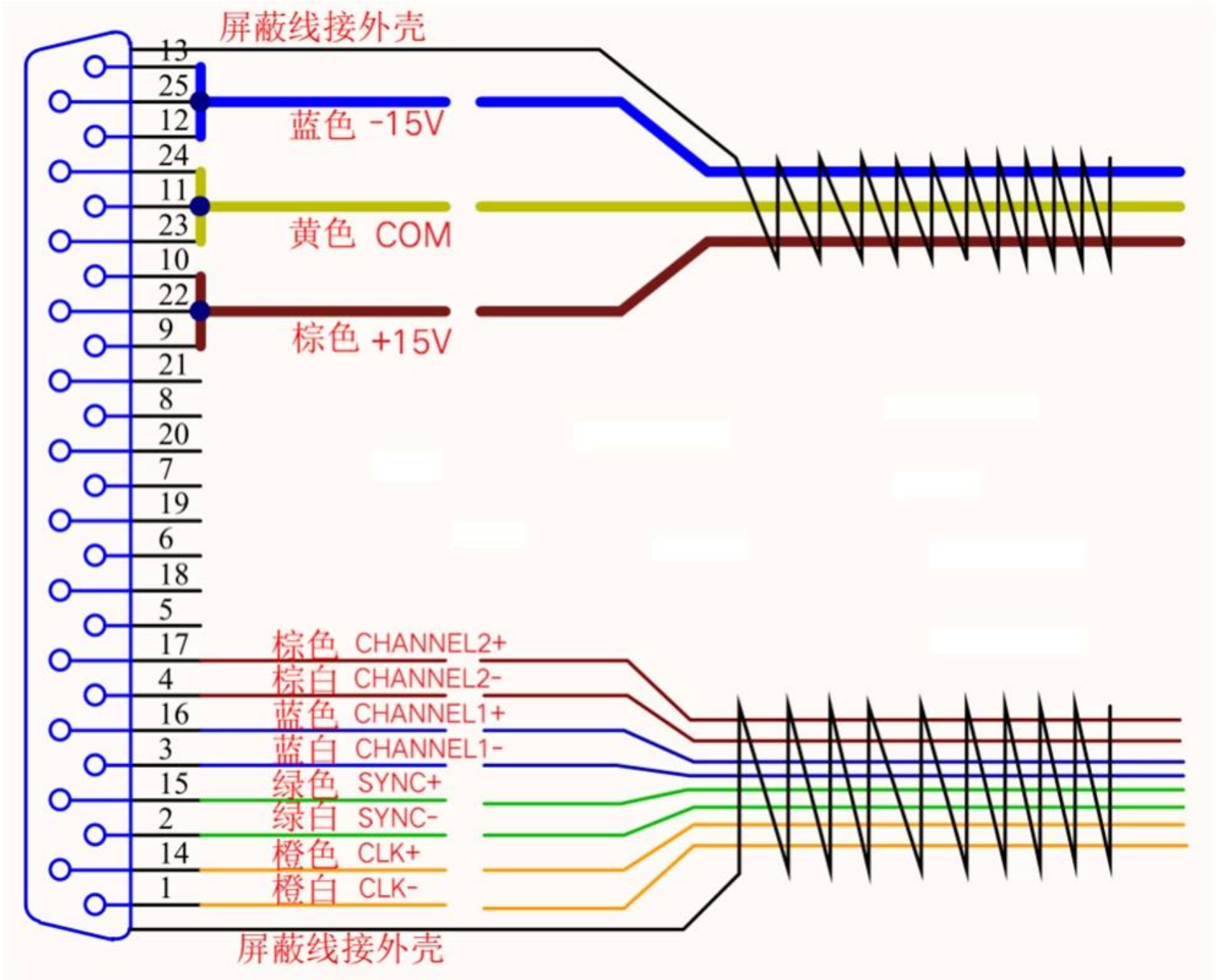
屏蔽线接外壳
13
25
12
24
11
23
10
22
9
21
8
20
7
19
6
18
5
17
4
16
3
15
2
14
1
蓝色 -15V
黄色 COM
棕色 +15V
棕色 CHANNEL2+
棕白 CHANNEL2-
蓝色 CHANNEL1+
蓝白 CHANNEL1-
绿色 SYNC+
绿白 SYNC-
橙色 CLK+
橙白 CLK-
屏蔽线接外壳

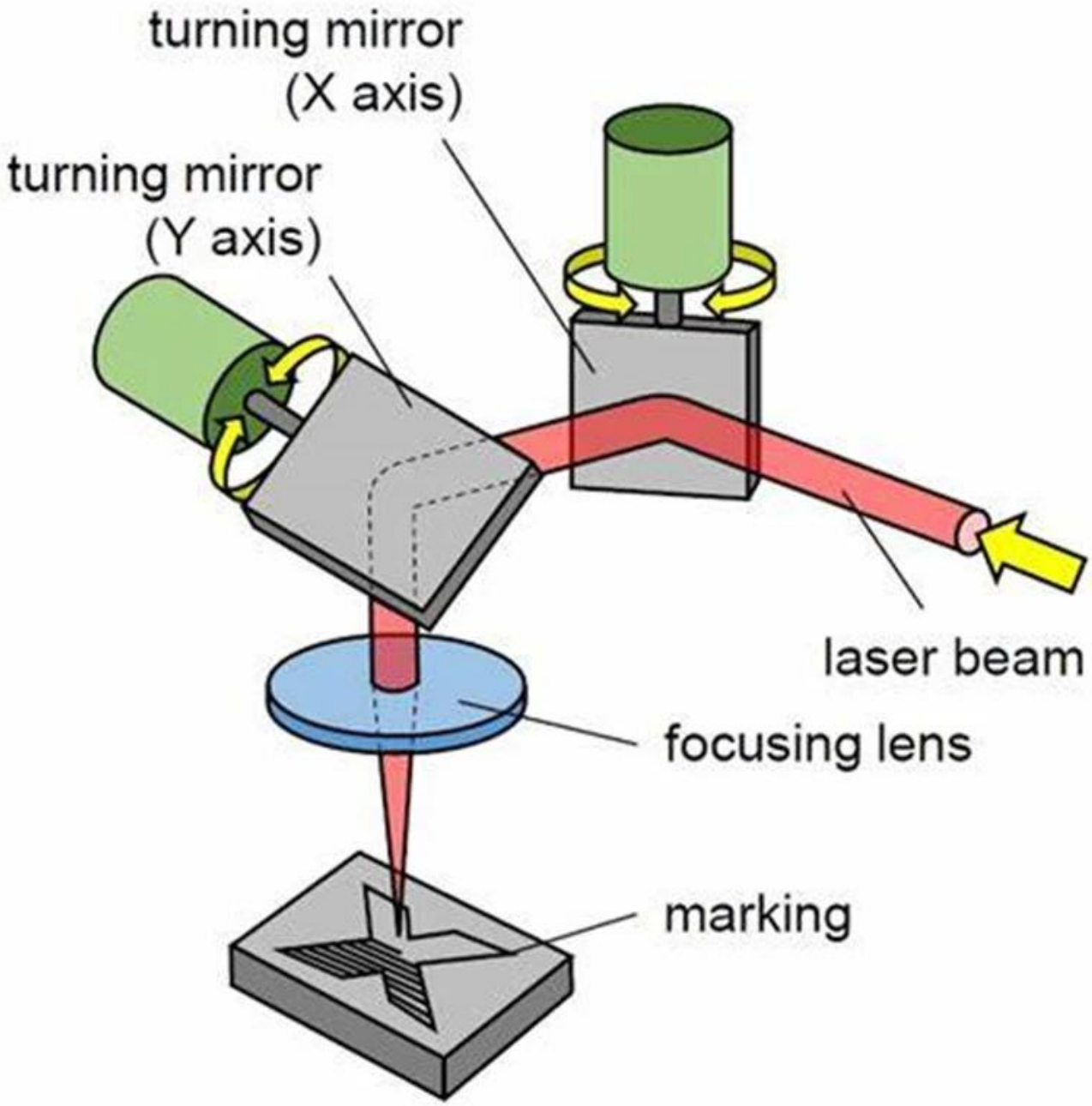
turning mirror
(X axis)
turning mirror
(Y axis)
laser beam
focusing lens
marking

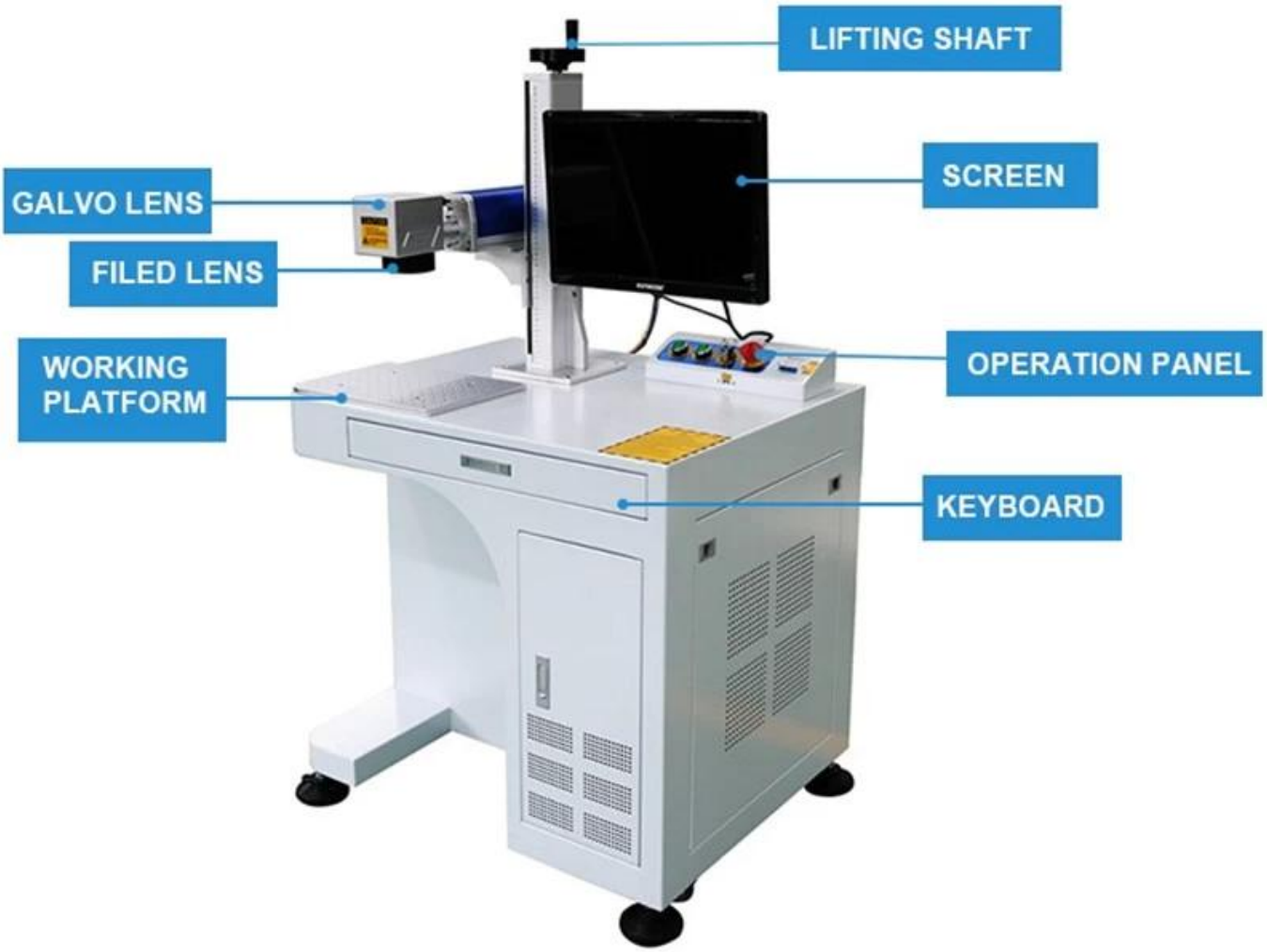
LIFTING SHAFT
SCREEN
GALVO LENS
FILED LENS
WORKING PLATFORM
OPERATION PANEL
KEYBOARD

Elevator
Galvanometer
Lens
Laser Source
Computer
Worktable
Keyboard
Switch
Laser Power
Water Chiller
CW-5200

UV F-theta □□ □□ □□

□□

卡门哈斯（苏州）
CARMAN HAAS

CARMAN HAAS

venfire
zygo
LSXP

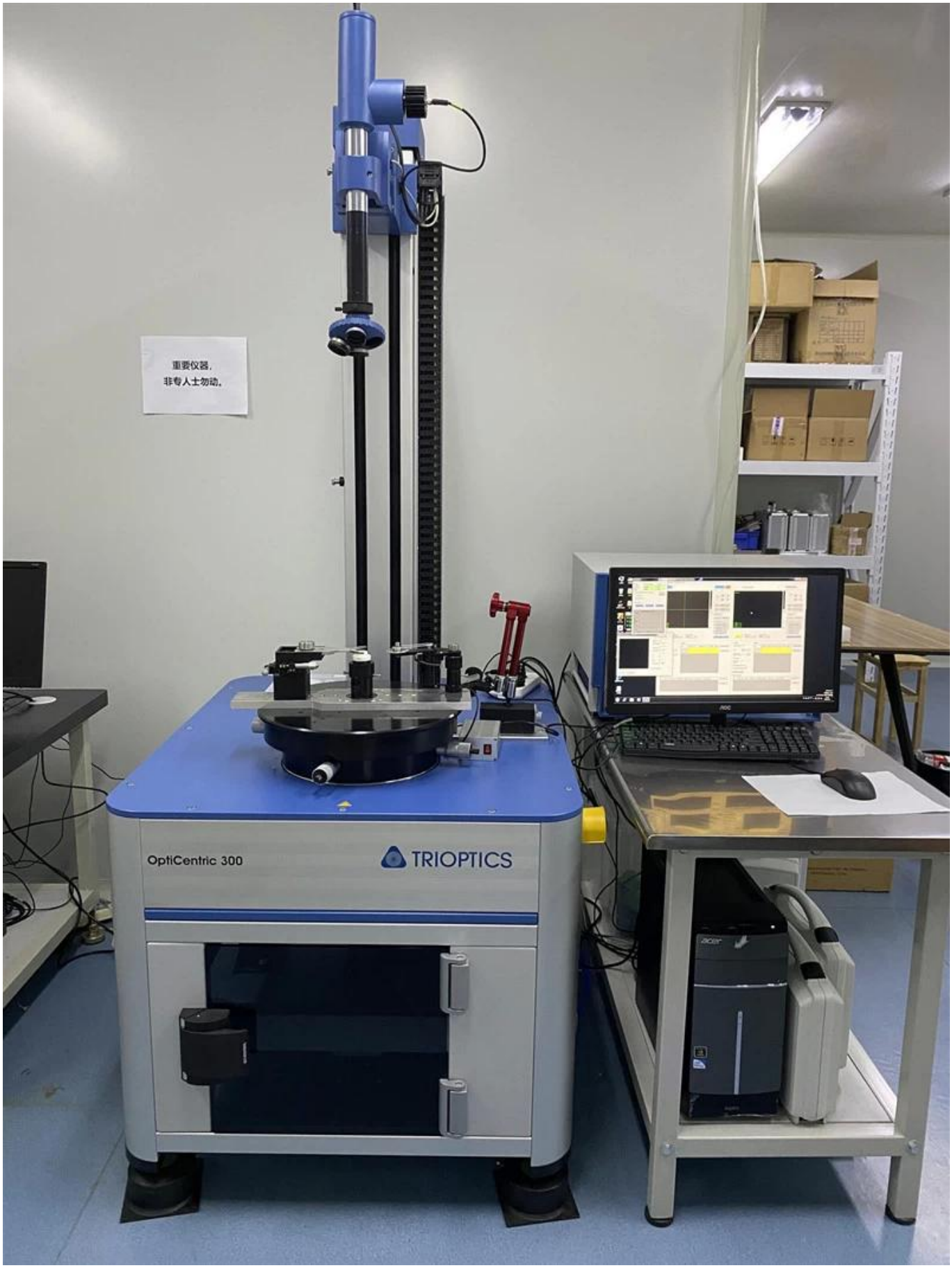
重要仪器，
非专人士勿动。
OptiCentric 300
TRIOPTICS

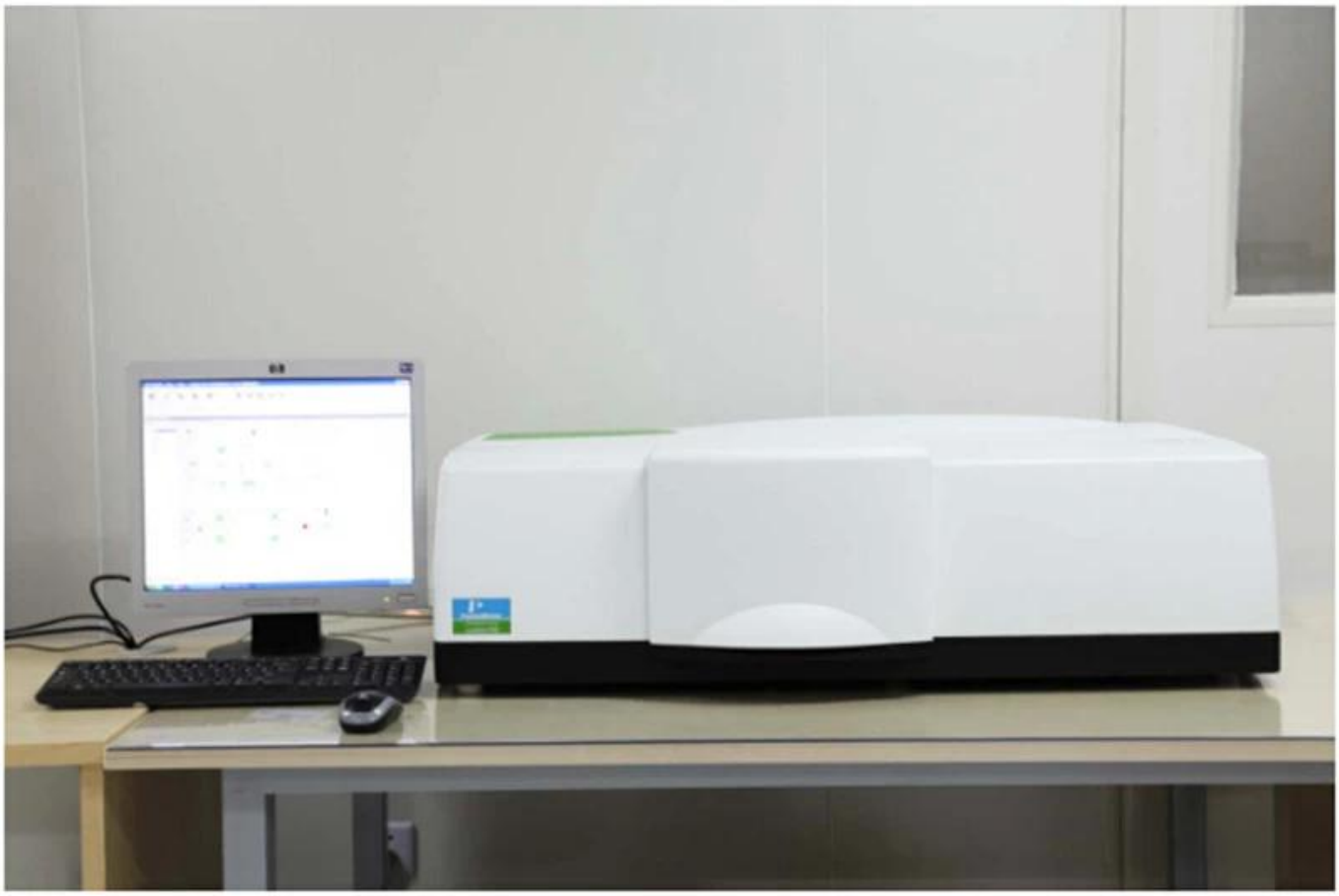

PerkinElmer Lambda 950---Testing Transmission and Reflectivity

□□□ □ □□

慕尼黑上海光博会
LASER PHOTONICS CHINA
LASER PHOTONICS
Messe München
LASER PHOTONICS INDIA
卡门哈斯

SERIGRAFIA
SIGN
FUTURETEXTIL
Brazil
CARMAN HAAS LASER
1-121
CARMAN HAAS Laser
Technology (Suzhou) Co., Ltd.
4I16
Laser Korea 2019

MAKTEK
eurasia
Turkey
SIGNiSTANBUL
PEKLAMA
Russia
RAYLOGIC
YAROV
INTERNATIONAL PAVILION
CARMAN HAAS LASER
L-46
CARMAN HAAS LASER TECHNOLOGY CO., LTD.

CERTIFICATE

ATIESTATION
CERTIFICATE OF MACHINERY AND LOW VOLTAGE DIRECTIVES

Technical file of the company mentioned below has been observed and audit has been completed successfully. 2006/42/EC Machinery Directive and 2014/ 35/EU Low Voltage Directive have been taken as references for these processes

Company Name	: **Carman HAAS Laser Technology (Suzhou) Co., Ltd.**
Company Address	: No 155, West Road Suhong, Suzhou Industrial Park, Suzhou City, Jiangsu , P.R.China
Related Directives and Annex	: **Low Voltage Directive 2014/35/EU** **Machinery Directive 2006/42/EC**
Related Standards	: **EN ISO 12100:2010; EN 60204-1:2006+A1:2009+AC:2010**
Product Name	: **Laser Marking Machine**
Report No and Date	: SD-90049717;09.08.2018
Product Brand/Model/Type	: LMCH-3W,LMCH-5W,LMCH-10W,LMCH-15W,LMCH-20W,LMCH-25W, LMCH-30W,LMCH-50W,LMCH-60W,LMCH-70W,LMCH-100W, LMCH-120W,LMCH-150W,LMCH-200W,LMCH-300W,LMCH-500W

Certificate Number	: **M.2018.201.N6073**
Initial Assessment Date	: 10.08.2018
Registration Date	: 13.08.2018
Reissue Date/No	:
Expiry Date	: **12.08.2023**

UDEM International Certification Auditing Training Centre Industry and Trade Inc. Co.

The validity of the certificate can be checked through www.udem.com.tr. The CE mark shown on the right can only be used under the responsibility of the manufacturer with the completion of EC Declaration of Conformity for all the relevant Directives. This certificate remains the property of UDEM International Certification Auditing Training Centre Industry and Trade Inc. Co. to whom it must be returned upon request. The above named firm must keep a copy of this certificate for 15 years from the registration of certificate. This certificate only covers the product(s) stated above and UDEM must be notified in case of any changes on the product(s)

Address: Mutlukent Mahallesi 2073 Sokak (Eski 93 Sokak) No:10 Çankaya – Ankara – TURKEY
Phone: +90 0312 443 03 90 **Fax:** +90 0312 443 03 76
E-mail: info@udemltd.com.tr www.udem.com.tr

ISO 9001

Certificate of Approval

Certificate No.: 10119Q12565R0M

Awarded to

Carman Haas Laser Technology(SuZhou) Co., Ltd.

Organization Code Certificate No. / Unified Social Credit Code:91320594MA1MF4EP56
Add.:No.155, West Road Suhong, Suzhou Industrial Park, Suzhou City, Jiangsu Province, P.R. China. 215000

Beijing ZhongLianTianRun Certification Center (ZLTR) certify that the Quality Management System of the above organization has been assessed and found to be in accordance with the requirements of the standard:

GB/T19001-2016 / ISO9001:2015

SCOPE OF CERTIFICATION/REGISTRATION

The Research and Development and Production of Optics Lenses (Except the limits of national laws and regulations.)

This certificate is made valid when used with certification scopes and the requirements of applicable laws and regulations. These requirements include, but are not limited to, administrative permits, scopes of qualifications, and CCC requirements.
Subject to operation conditions in requirements conformity with Quality Management System,
This Certificate is valid for a period of three years only,
Date from: Mar 13th,2019 To: Mar 12th,2022
The effectiveness of this Certificate shall be Validated by periodic surveillance audit of ZLTR for maintenance.
Information of this certificate can be found on the official website of Beijing Zhonglian Tianrun Certification center (http://www.zltr.com.cn)

SCC Accredited CB-MS OCSM Accredited CCN

ISSUED BY

Beijing Zhongliantianrun Certification Center
Room2603, 22nd Floor, 2nd Unit, Block 1, No.4 Yard, Qiyang Road, Chaoyang District, Beijing, P.R. China 100102

Information of this certificate can be found on the official website of Certification and Accreditation Administration of the People's Republic of China (http://www.cnca.gov.cn)

ISO 9001

□□ □□

Packaging & Shipping
CARMAN HAAS
CO2
1064
532
355

Product Packaging

Inquiry
Contract
Testing and packing
Receiving
Reply
Receive payment & Product
Delivery

ups
DHL
WORLDWIDE EXPRESS
TNT
EMS
FedEx

□□ □□ :

□□□ □□□□□ :
1 □□)□ □ □□□ □□□□ □□□□□.
2 □□) □□ □□□□ □□□ □□ □□□ □□□ □□□□□.
3 □□) □□ □□□ □□□□□.
4 □□) □□ □ □□ □□ □□□ □□ □□□ □□□□□□.

□□ □□:

(1) □□□ □□ □□ □□□ □□ DHL, UPS, FedEx, TNT, EMS □□□ □□ □□□ □ □ □□□□.
(2) □□□ □□ □□ □□□ □□ EXWork, FOB, CNF, CIF By Air □□ Sea by □□□□ □□□□ □□ □□□ □□□ □□ □□ □□□ □ □ □□□□.

□□□□ □□

Q1. □□□□□□□□?

A1 : □, □□□ □□□□□ □□□ □□□□ □□□□ □□ □□□ □□ □ □□ □□□□.

Q2. □□□ □□□ □□□□□?

A2 : □□□ □□□ □ QC □□ □□ □□, □□ □□ □ □□□ □□□□ □□□ □□□ □□□□□ □□ □□□ □□□ □□□□□.

Q3. □□□ □□□□□?

A3 : □□□ □□□□□□ □□ □□□□ □□ □□□□□ □□□ □□□□□.

Q4. □□□□ □□?

A4 : □□□ □□□□ □□□□□ □□□□ □□ □□□□ □□□□□, □□□ □ □□ □□, □□, □□ □□□□ □□□□ □□ □ □□□□. □□□□□.

Q5. □□ □□□ □□□□□ □□ □□□ □□ □ □□□□?

A5 : □! □□□ □□□ □□□ □□□□ □□□□□ □□ □□□ □□ □ □□□□.

Q6. □□□ □□ □ □ □□□□?

A6 : □, □□□ □□□ □□ □□□ □□□ □□□□□.

Q7. OEM □□ ODM □□□ □□□ □ □ □□□□?

A7 : □□□ □□ OEM / ODM ord□□□ □□ □□ □□□ □□□□ers. □□□ □□□□ □□□□ □□□□□ □□□□ □□ □□□□ □□□□□.

Q8. □□ □□□ □□□ □□□□□□□?

A8 : T / T□ □□ □ □ □□□ □□□ □□ □□ □ □ □□□ □□□ MOQ□ □□□ □ □□□□.