□□ □□

□□ □□ :

Raytool □□ □ □□ □□ □□, Carmanhaas □□ □□ □□ □□□ □□□ □□□ □□ □□□ □□ □□□ □□□□ □□ □□ □□ □□ □ □□□ □□□ □□ □□ □□□ □□□□□.

□□ □□:

(1) □□ □ □□ □□ □□ □□
(2) □□ □□□ : λ / 5
(3) □□ □□□ : □□ 15000W
(4) □□ □□ □□, □□ □□ <20ppm, □ □□
(5) □□ 0.2μm□ □□□ □□ □□□

CARMAN HAAS

QBH
Collimating Lens
Focusing Lens
Protective Window
Ceramic Ring
Nozzle

□□ □□ :

□□□	
□□ □□	□□ □□□
□□ □□	+0.000”-0.005”
□□ □□	± 0.01”
□□ □□	40-20
□□ □□ : (Plano)	≤ 1 □

□□ □□ :

□□□	
□□ □□ AR □□	
□ □□	<100PPM
□□□	> 99.9 %

□□ □□□ □□ □ :

□□ (mm)	□□ (mm)	□□
21.5	2	AR / AR @ 1030-1090nm
24.9	1.5	AR / AR @ 1030-1090nm
32	2	AR / AR @ 1030-1090nm
38.1	1.5	AR / AR @ 1030-1090nm
22.35	4	AR / AR @ 1030-1090nm
25.4	4	AR / AR @ 1030-1090nm
27.9	4.1	AR / AR @ 1030-1090nm
30	5	AR / AR @ 1030-1090nm
32	5	AR / AR @ 1030-1090nm
37	7	AR / AR @ 1030-1090nm
38.1	6.35	AR / AR @ 1030-1090nm

Installation Diagram

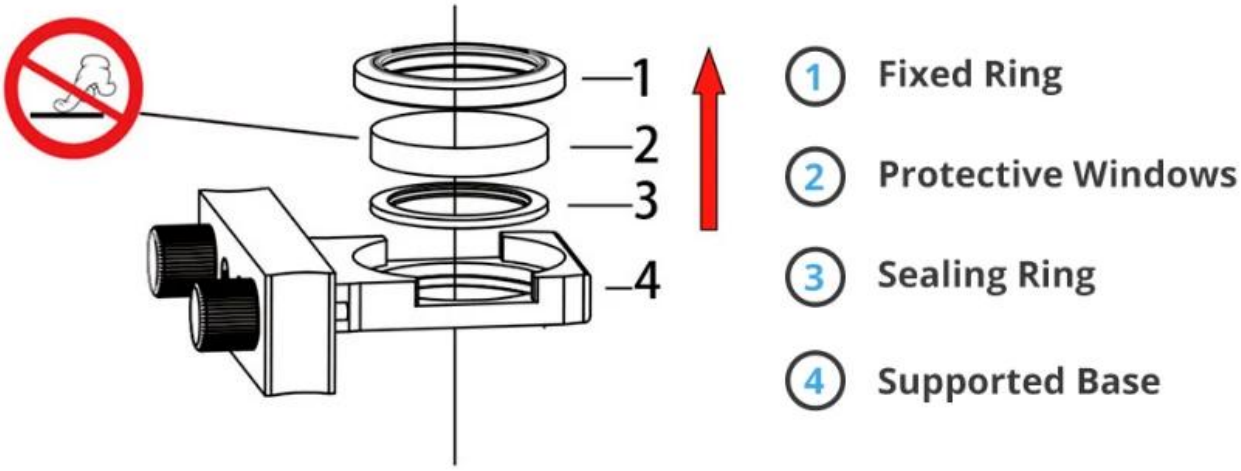

NOTICE: 1—3 Parts Should be taken out in the direction of the arrow, otherwise these parts will be damaged.

□□

TRIOPTICS OptiSpheric 2000 AF

---Testing EFL、R、Centering Error、Wedge Angle、BFL、MTF

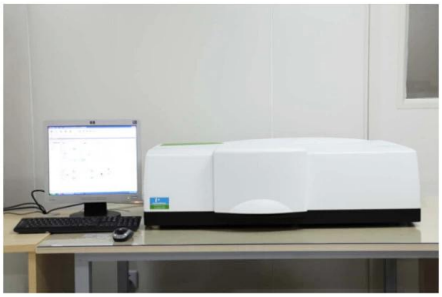

PerkinElmer Lambda 950---Testing Transmission and Reflectivity

Carmanhaas Coating Machine

□□ □ □□

慕尼黑上海光博会
LASER PHOTONICS CHINA
LASER PHOTONICS
Messe München
LASER PHOTONICS INDIA
卡门哈斯

SERIGRAFIA
SIGN
FUTURETEXTIL
Brazil
CARMAN HAAS LASER
1-121
CARMAN HAAS Laser
Technology (Suzhou) Co., Ltd.
4I16
Laser Korea 2019

MAKTEK
eurasia
Turkey
SIGNiSTANBUL
PEKLAMA
Russia
RAYLOGIC
YAROV
INTERNATIONAL PAVILION
CARMAN HAAS LASER
L-46
CARMAN HAAS LASER TECHNOLOGY CO., LTD.

□□ □□

Packaging & Shipping

Packaging 1

Packaging 2

Packaging 3

Shipping 4

DHL EXPRESS

TNT

EMS

FedEx Federal Express

SF EXPRESS 顺丰速运

ups

Inquiry
Contract
Testing and packing
Receiving
Reply
Receive payment & Product
Delivery

ups
DHL
WORLDWIDE EXPRESS
TNT
EMS
FedEx

□□ □□ :

□□□ □□□ □□ :
1 □□)□ □ □□□ □□□□ □□□□□□.
2 □□) □□□□ □□□ □□ □□□ □ □□□ □□□□□□.
3 □□) □□ □□ □□□ □□□□□.
4 □□) □□ □ □□ □□ □□□ □□ □□□ □□□□□□.

□□ □□:

(1) □□□ □□ □□ □□, □□ DHL, UPS, □□□, TNT, EMS □

(2) □□□ □□ □□ □□, □□ EXEX, FOB, CNF, CIF □□ □□ □□ □□□□ forwar ders □□ □□□.

□□□□ □□

Q1. □□□□□□□?

A1 : □□□□□, □□□ □□□ □□□ □ □ □□ □□□ □□ □□□□□ □□□□ □□□□□□.

Q2. □□□ □□□ □□?

A2 : □□□ □□□□ QC □□ □□ □□□ □□□ □□□□ □□ □□ □□, □□ □□ □ □□□□ □□□□ □□□ □□□ □□□□□□.

Q3. □□□ □□?

A3 : □□□ □□□□□ □□ □□□ □□□□ □□ □□ □□□ □□□□□.

Q4. □□□□ □□?

A4 : □□□ □□□, □□ □□□□ □□ □□□□ □□, □□□ □ □□ □□, □□, □□ □. □□□□□.

Q5. □□ □□□ □□□□□ □□ □□□ □□ □ □□□□?

A5 : □□□□□! □□□ □□□ □□□□ □□□□□ □□ □□□ □□□ □ □□□□.

Q6. □□□ □□ □ □ □□□□?

A6 : □□□□□, □□□ □□□ □□□ □□ □□□ □□□□ □□.

Q7. □□□ OEM □□ ODM □□?

A7 : □□□ □□ □□ □□ □□ OEM / ODM orders. □□□ □□□□ □□□□□ □□ □□□□ □□□□□□.

Q8. □□ □□□ □□□ □□□□□?

A8 : □□□ □□ T / T □□□ □□□ □□ □ MOQ □ □□.