Product Information

Product Description:

Carmanhaas reflector mirror is used in CO2 laser engraving cutting machine. (**CO2 reflector mirror supplier china**)
Silicon is the most commonly used mirror substrate; its advantage are low cost, good durability, and thermal stability.Molybdenum mirror extremely tough surface makes it ideal for the most demanding physical environments. Mo mirror is normally offered uncoated.

CARMAN HAAS

Si Reflector Mirror

Gold coating,silicon material

Gold coating,silicon material

Detail Image

Click China Laser cutting machine lens factory to learn more

Technical Parameters:

Specifications	Standards
Dimensional Tolerance	+0.000” / -0.005”
Thickness Tolerance	±0.010”
Parallelism : (Plano)	≤ 3 arc minutes
Clear Aperture (polished)	90% of diameter
Surface Figure @ 0.63um	Power: 2 fringes, Irregularity: 1 fringe
Scratch-Dig	10-5

Silicon Reflector:

Diameter (mm)	ET (mm)
19/20	3
25/25.4	3
28	8
30	3/4
38.1	3/4/8
44.45	9.525
50.8	5/5.1
50.8	9.525
76.2	6.35

Note: other size if need, pls contact to our sales.

Reflector Manufacturer China

Advantage

- High purity, low absorption material (body absorption less than 0.0005/cm-1)
- High damage threshold coating (>8000W/cm2)。
- Lens focusing reaches diffraction limit

Laser light path schematic

① Laser tube ② First mirror ③ Second mirror ④ Third mirror ⑤ Focus lens

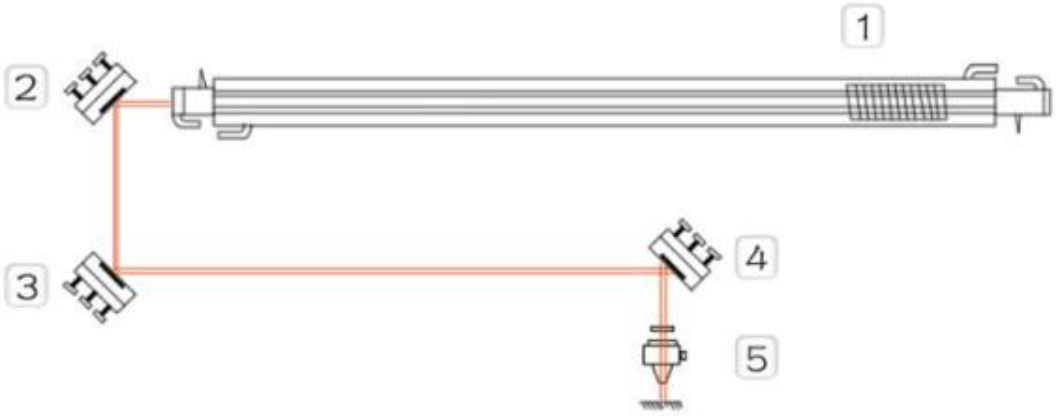

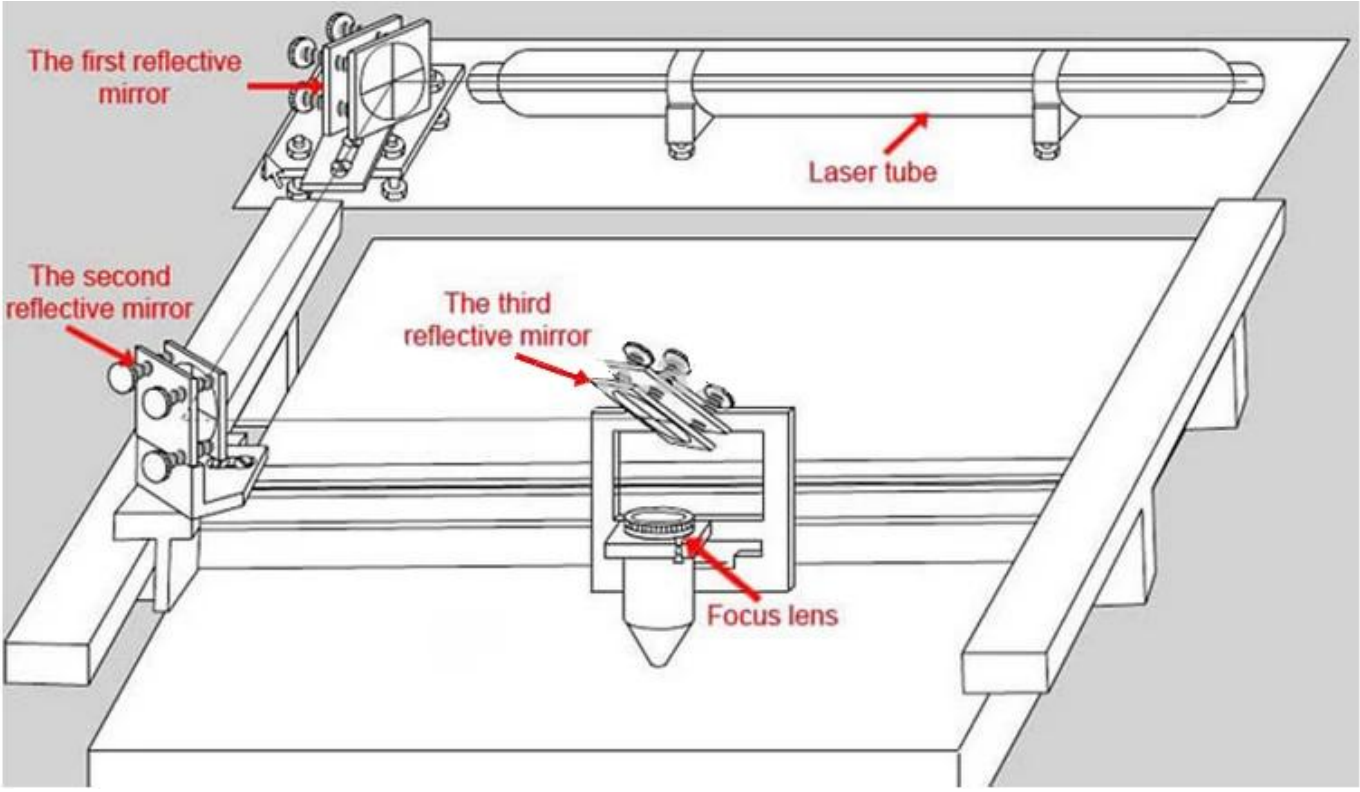
The first reflective mirror
Laser tube
The second reflective mirror
The third reflective mirror
Focus lens

Factory

卡门哈斯(苏州)
CARMAN HAAS

CARMAN HAAS
企业愿景：致

verifire
zygo

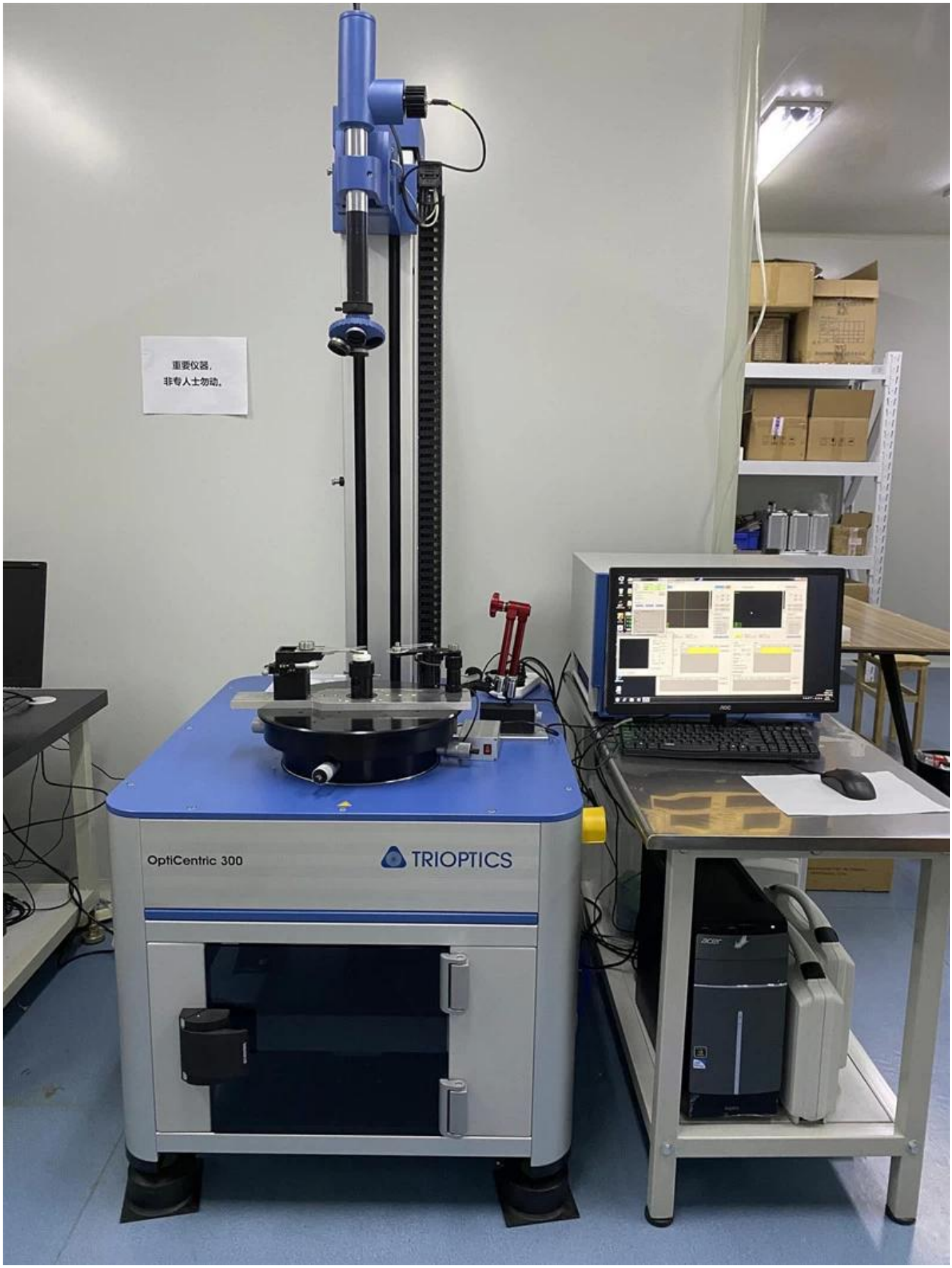
重要仪器，
非专人士勿动。
OptiCentric 300
TRIOPTICS

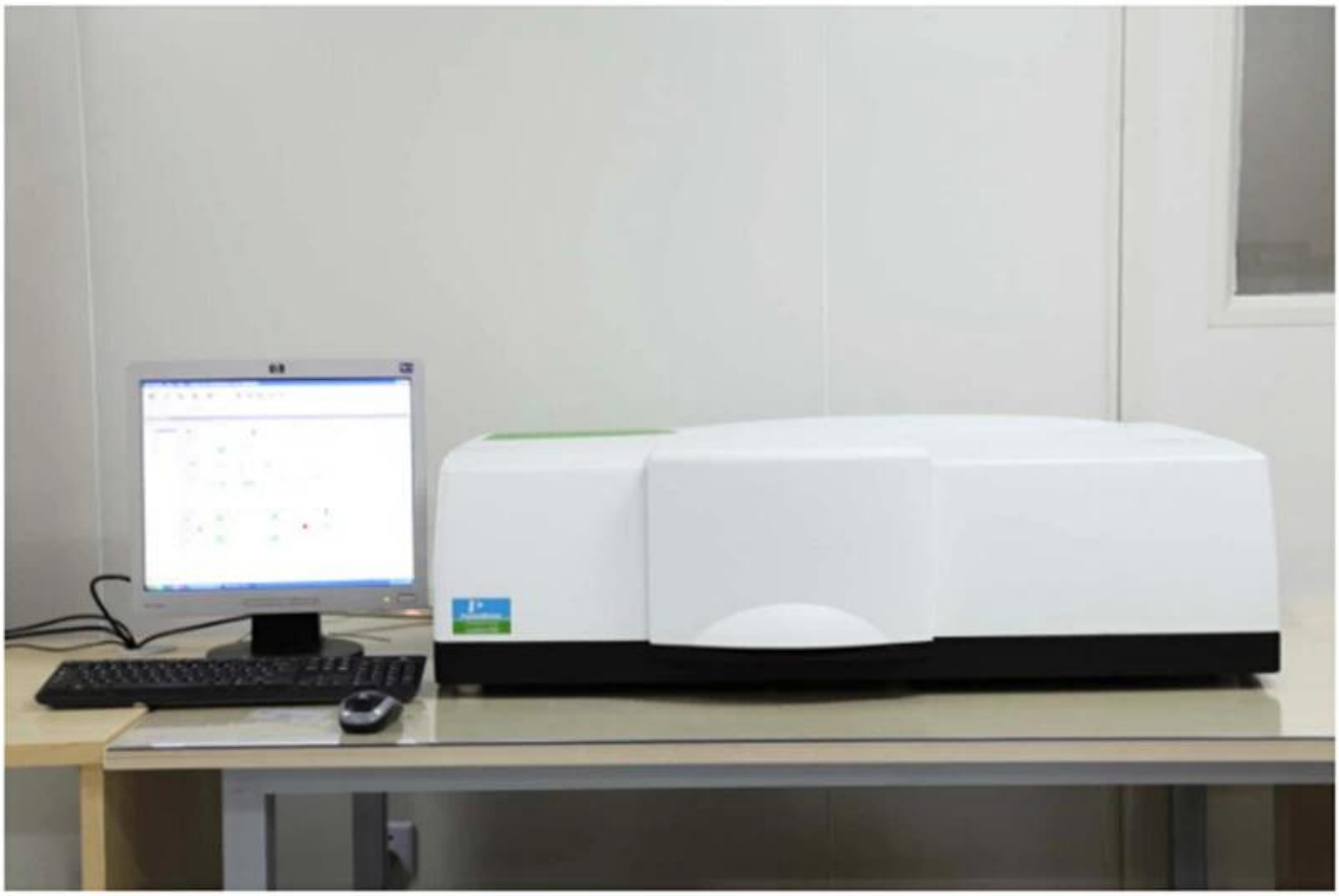

PerkinElmer Lambda 950---Testing Transmission and Reflectivity

CERTIFICATE

ATIESTATION
CERTIFICATE OF MACHINERY AND LOW VOLTAGE DIRECTIVES

Technical file of the company mentioned below has been observed and audit has been completed successfully. 2006/42/EC Machinery Directive and 2014/ 35/EU Low Voltage Directive have been taken as references for these processes

Company Name	: **Carman HAAS Laser Technology (Suzhou) Co., Ltd.**
Company Address	: No 155, West Road Suhong, Suzhou Industrial Park, Suzhou City, Jiangsu , P.R.China
Related Directives and Annex	: **Low Voltage Directive 2014/35/EU** **Machinery Directive 2006/42/EC**
Related Standards	: **EN ISO 12100:2010; EN 60204-1:2006+A1:2009+AC:2010**
Product Name	: **Laser Marking Machine**
Report No and Date	: SD-90049717;09.08.2018
Product Brand/Model/Type	: LMCH-3W,LMCH-5W,LMCH-10W,LMCH-15W,LMCH-20W,LMCH-25W, LMCH-30W,LMCH-50W,LMCH-60W,LMCH-70W,LMCH-100W, LMCH-120W,LMCH-150W,LMCH-200W,LMCH-300W,LMCH-500W
Certificate Number	: **M.2018.201.N6073**
Initial Assessment Date	: 10.08.2018
Registration Date	: 13.08.2018
Reissue Date/No	:
Expiry Date	: **12.08.2023**

UDEM International Certification Auditing Training Centre Industry and Trade Inc. Co.

The validity of the certificate can be checked through www.udem.com.tr. The CE mark shown on the right can only be used under the responsibility of the manufacturer with the completion of EC Declaration of Conformity for all the relevant Directives. This certificate remains the property of UDEM International Certification Auditing Training Centre Industry and Trade Inc. Co. to whom it must be returned upon request. The above named firm must keep a copy of this certificate for 15 years from the registration of certificate. This certificate only covers the product(s) stated above and UDEM must be noticed in case of any changes on the product(s)

Address: Mutlukent Mahallesi 2073 Sokak (Eski 93 Sokak) No:10 Çankaya – Ankara – TURKEY
Phone: +90 0312 443 03 90 **Fax:** +90 0312 443 03 76
E-mail: info@udemltd.com.tr www.udem.com.tr

ISO 9001

Certificate of Approval

Certificate No.: 10119Q12565ROM

Awarded to

Carman Haas Laser Technology(SuZhou) Co., Ltd.

Organization Code Certificate No. / Unified Social Credit Code:91320594MA1MF4EP56
Add.:No.155, West Road Suhong, Suzhou Industrial Park, Suzhou City, Jiangsu Province, P.R. China. 215000

Beijing ZhongLianTianRun Certification Center (ZLTR) certify that the Quality Management System of the above organization has been assessed and found to be in accordance with the requirements of the standard:

GB/T19001-2016 / ISO9001:2015

SCOPE OF CERTIFICATION/REGISTRATION

The Research and Development and Production of Optics Lenses (Except the limits of national laws and regulations.)

This certificate is made valid when used with certification scopes and the requirements of applicable laws and regulations. These requirements include, but are not limited to, administrative permits, scopes of qualifications, and CCC requirements.
Subject to operation conditions in requirements conformity with Quality Management System,
This Certificate is valid for a period of three years only,
Date from: Mar 13th,2019 To: Mar 12th,2022
The effectiveness of this Certificate shall be Validated by periodic surveillance audit of ZLTR for maintenance.
Information of this certificate can be found on the official website of Beijing Zhonglian Tianrun Certification center (http://www.zltr.com.cn)

SCC Accredited CB-MS
OCSM Accrédité CCN
Accredited CB-MS (Certification Body – Management Systems)

MEMBER OF MULTILATERAL RECOGNITION ARRANGEMENT IAF

Beijing Zhongliantianrun Certification Center ISSUED BY

Beijing Zhongliantianrun Certification Center
Room2603, 22nd Floor, 2nd Unit, Block 1, No.4 Yard, Qiyang Road, Chaoyang District, Beijing, P.R. China 100102
Information of this certificate can be found on the official website of Certification and Accreditation Administration of the People's Republic of China (http://www.cnca.gov.cn)

ISO 9001

Packing List

Packaging & Shipping

Packaging 1

Packaging 2

Packaging 3

Shipping 4

DHL EXPRESS

TNT

EMS

FedEx Federal Express

SF EXPRESS 顺丰速运

ups

Return Policy:

Should returns be required:

Step 1) Contact us with this website email.

Step 2) Provide as much detail as possible about the problem you are having.

Step 3) Authorization to return the item will be issued.
Step 4) Return the item for the agreed replacement or refund.

Logistics:
(1)For Laser Optics Order, delivery by DHL, UPS, FedEx, TNT, EMS etc.
(2)For Laser Machine Order, delivery could be optional with terms of EXW, FOB, CNF, CIF by Air or by Sea based on the buyer's forwarder or ours.

FAQ

Q1.Are you a manufacturer?
A1: Yes, we are professio nal and experienced manufacturer with our own molds and production lines.

Q2.How about quality of products?
A2: Our technicians and QC teams test the products one by one using aging line, professional devices and instruments to ensure the quality for all products.

Q3.How about price?
A3: We are a manufacturer and always offer our customers the most competitive prices.

Q4.How to place an order?
A4: Contact with online service, or sent email to us directly, we will reply to you with product price, specifications, packing etc. soon. Thank you.

Q5.May I send material to test marking performance?
A5: Yes! You are welcome to send material to test our superior quality and service.

Q6.Can I visit your factory?
A6: Yes, welcome to visit our factory at your convenient time.

Q7.How can I make OEM or ODM orders?
A7: We have different print processing for different OEM/ODM orders. Please contact us with online service or send email to us directly.

Q8. How should I pay for my orders?
A8: You can pay by T/T would be available for qualified bank and MOQ required for each order.