Technical Specifications

	L20	L30
Aperture Size	20mm	30mm
Typical Scan Angle	±20°	±20°
Power Requirements	±24VDC	±24VDC
1% Full Scale	0.52ms	0.65ms
Marking Speed	2.5m/s	2m/s
Positioning Speed	5m/s	4m/s
Writing Speed	450cps	350cps
Repeatability	12μrad	12μrad
Gain Drift	90ppm/K	90ppm/K
Offset Drift	60μrad/K	60μrad/K
Long-term Drift	0.35mrad	0.35mrad
Operating Temperature	25℃±10℃	25℃±10℃
Digital Communication	XY2-100	XY2-100
Mirror Coatings	YAG/CO2/Silver	YAG/CO2/Silver
Weight	2.62kg	3.12kg

Drawing for L20

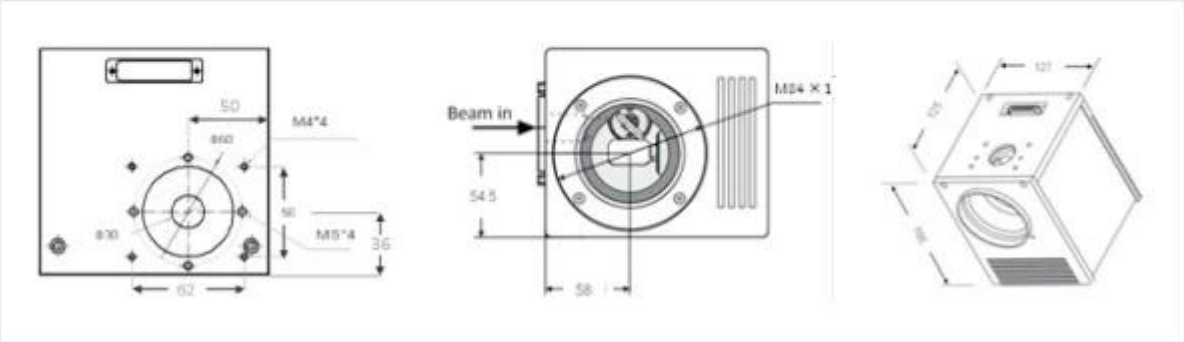

CARMAN HAAS
Galvanometer Scanner

Trade Shows

2014

2015

2016

Packaging & Shipping

Packaging 1

Packaging 2

Packaging 3

Shipping 4

DHL EXPRESS

TNT

EMS

FedEx Federal Express

SF EXPRESS 顺丰速运

ups

Inquiry
Reply
Contract
Receive payment & Product
Testing and packing
Delivery
Receiving